WIN15

1 Technical Parameter

Maximum air temperature at air outlet	600˚C
Maximum air temperature at air intlet	50˚C
Maximum temperature of operating environment	50˚C
Maximum voltage at air inlet	100KPa
European standard conforming mark	CE
Safety level	⧈

2 Product Picture

● Heating power is not adjustable

● Potentiometer heating power is adjustable

● Potentiometer or remote control interface available, Adjust heating power and temperature.

3 Product Model

Type	Voltage	Power	Current	Frequency
WIN15-A	120V	550W	5A	50/60Hz
WIN15-B	230V	770W	4A	50/60Hz

4 Installation Dimension

WIN15

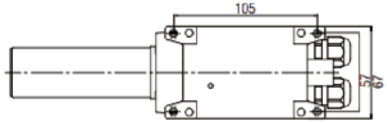

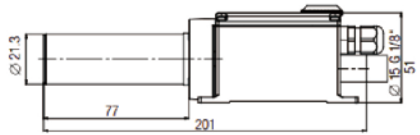

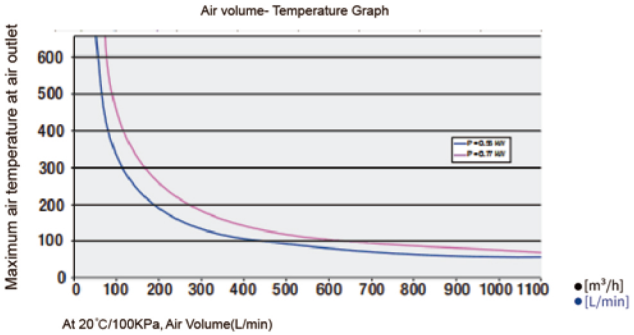

WIN30

1 Technical Parameter

Maximum air temperature at air outlet	600˚C
Maximum air temperature at air intlet	50˚C
Maximum temperature of operating environment	50˚C
Maximum voltage at air inlet	100KPa
European standard conforming mark	CE
Safety level	⧈

2 Product Picture

● Heating power is not adjustable

● Potentiometer heating power is adjustable

3 Product Model

Type	Voltage	Power	Current	Frequency
WIN30D-A	120V	2200W	19A	50/60Hz
WIN30D-B	230V	3300W	15A	50/60Hz
WIN30D-C	380V	3300W	9A	50/60Hz

4 Installation Dimension

WIN30

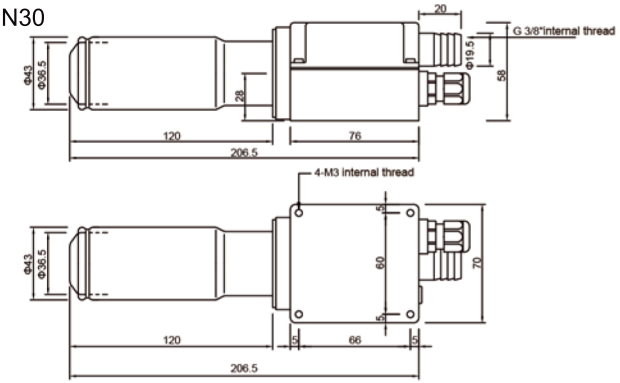

Air volume- Temperature Graph

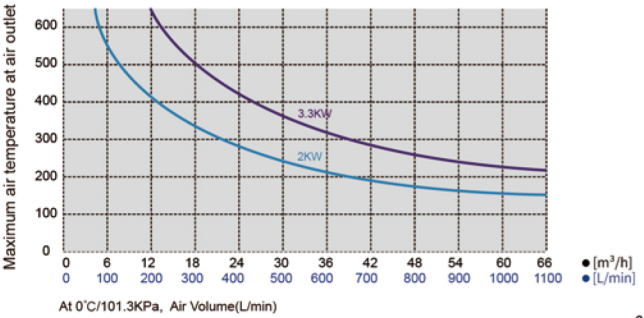

At 0˚C/101.3KPa, Air Volume(L/min)

WIN30D/30S

1 Technical Parameter

Maximum air temperature at air outlet	600˚C
Maximum air temperature at air intlet	50˚C
Maximum temperature of operating environment	50˚C
Maximum voltage at air inlet	100KPa
European standard conforming mark	CE
Safety level	⧈

2 Product Picture

● Heating power is not adjustable

● Potentiometer heating power is adjustable

3 Product Model

Type	Voltage	Power	Current	Frequency
WIN30D/30S-A	120V	2200W	19A	50/60Hz
WIN30D/30S-B	230V	3300W	15A	50/60Hz
WIN30D/30S-C	380V	3300W	9A	50/60Hz

4 Installation Dimension

WIN30D

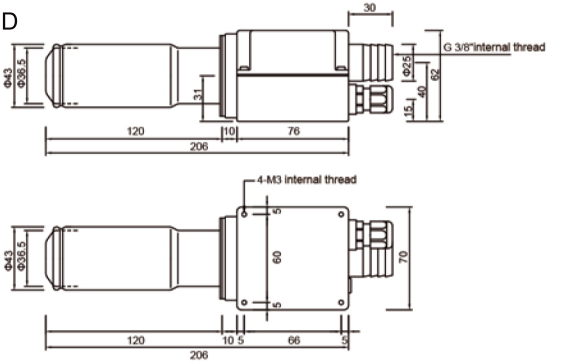

The diameter is φ36.5mm at air outlet for WIN30S, other dimensions are same as WIN30D

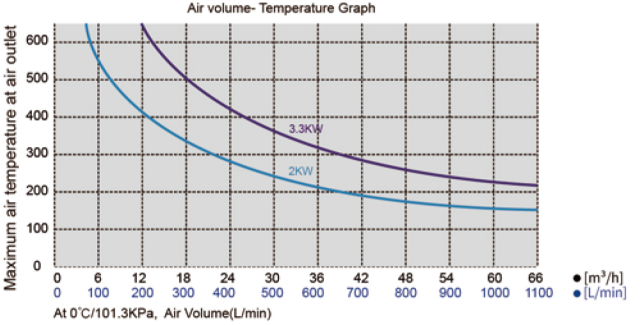

WIN2000L

1 Technical Parameter

Maximum air temperature at air outlet	600˚C
Maximum air temperature at air intlet	50˚C
Maximum temperature of operating environment	50˚C
Maximum voltage at air inlet	100KPa
European standard conforming mark	CE
Safety level	⧈

2 Product Picture

● Heating power is not adjustable

● Potentiometer heating power is adjustable

● Potentiometer or remote control interface available, Adjust heating power and temperature.

3 Product Model

Type	Voltage	Power	Current	Frequency
WIN2000L-A	120V	1000W	9A	50/60Hz
WIN2000L-B	120V	2000W	17A	50/60Hz
WIN2000L-C	230V	1000W	5A	50/60Hz
WIN2000L-D	230V	2000W	9A	50/60Hz
WIN2000L-E	230V	3300W	15A	50/60Hz
WIN2000L-F	380V	3300W	9A	50/60Hz
WIN2000L-G	380V	3500W	10A	50/60Hz

4 Installation Dimension

WIN2000L（E/F/G）

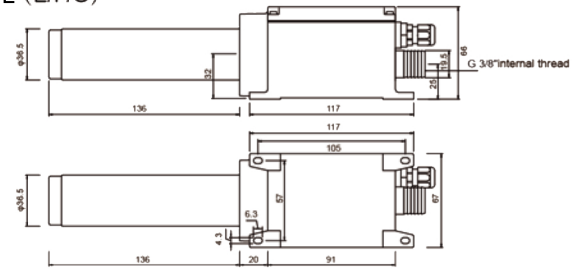

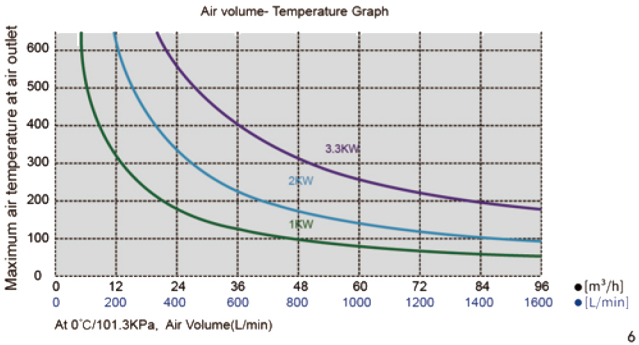

WIN4000

1 Technical Parameter

Maximum air temperature at air outlet	600˚C
Maximum air temperature at air intlet	50˚C
Maximum temperature of operating environment	50˚C
Maximum voltage at air inlet	100KPa
European standard conforming mark	CE
Safety level	⧈

2 Product Picture

● Heating power is not adjustable

● Potentiometer heating power is adjustable

● Potentiometer or remote control interface available, Adjust heating power and temperature.

3 Product Model

Type	Voltage	Power	Current	Frequency
WIN4000-A	120V	2000W	17A	50/60Hz
WIN4000-B	230V	2000W	9A	50/60Hz
WIN4000-C	230V	3600W	16A	50/60Hz
WIN4000-D	230V	4400W	20A	50/60Hz
WIN4000-E	380-400V	1800-2000W	5A	50/60Hz
WIN4000-F	380-400V	4000-4400W	11A	50/60Hz
WIN4000-G	380-400V	5000-5500W	14A	50/60Hz

4 Installation Dimension

WIN4000（D/E/F/G）

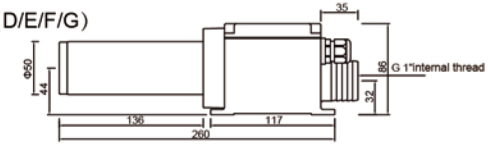

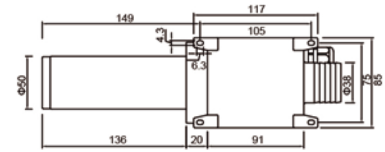

The airduct length of WIN4000(A/B/C) is106mm, other dimensions are same as WIN4000(D/E/F/G).

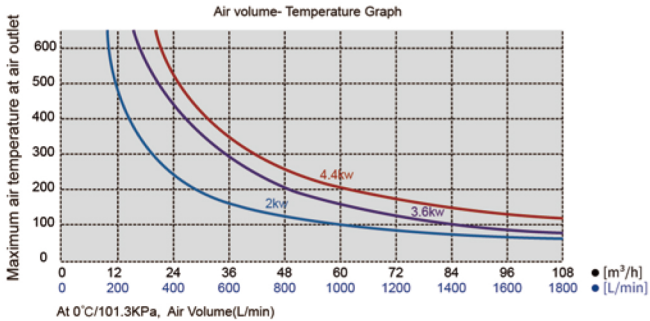

WIN50

1 Technical Parameter

Maximum air temperature at air outlet	600˚C
Maximum air temperature at air intlet	50˚C
Maximum temperature of operating environment	50˚C
Maximum voltage at air inlet	100KPa
European standard conforming mark	CE
Safety level	⧈

2 Product Picture

● Heating power is not adjustable

● Potentiometer heating power is adjustable

3 Product Model

Type	Voltage	Power	Current	Frequency
WIN50-A	230V	4.5KW	20A	50/60Hz
WIN50-B	380-400V	5-5.5KW	14A	50/60Hz
WIN50-C	380-400V	7.5-8.5KW	20-22A	50/60Hz
WIN50-D	480V	8KW	17A	50/60Hz
WIN50-E	380-440V	5-6.7KW	13-16A	50/60Hz
WIN50-F	380-440V	7.5-10KW	20-23A	50/60Hz

4 Installation Dimension

WIN50

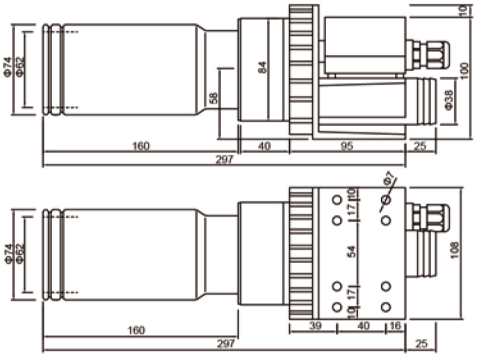

Air volume- Temperature Graph

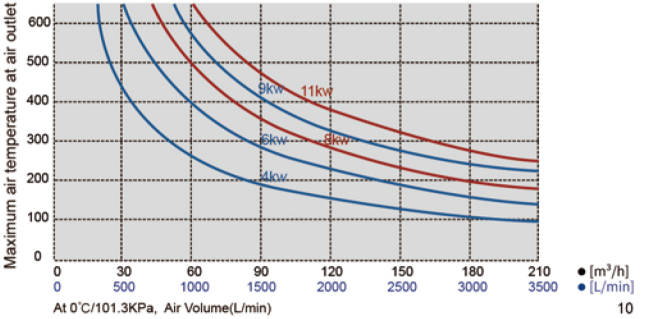

WIN6000L

1 Technical Parameter

Maximum air temperature at air outlet	600˚C
Maximum air temperature at air intlet	50˚C
Maximum temperature of operating environment	50˚C
Maximum voltage at air inlet	100KPa
European standard conforming mark	CE
Safety level	⧈

2 Product Picture

● Heating power is not adjustable

● Potentiometer heating power is adjustable

● Potentiometer or remote control interface available, Adjust heating power and temperature.

3 Product Model

Type	Voltage	Power	Current	Frequency
WIN6000L-A	3X230V	8KW	20A	50/60Hz
WIN6000L-B	3X230V	10KW	26A	50/60Hz
WIN6000L-C	3X400V	5KW	8A	50/60Hz
WIN6000L-D	3X400V	8KW	12A	50/60Hz
WIN6000L-E	3X480V	8KW	10A	50/60Hz
WIN6000L-F	3X400V	11KW	16A	50/60Hz
WIN6000L-G	3X400V	16KW	23A	50/60Hz
WIN6000L-H	3X480V	11KW	14A	50/60Hz
WIN6000L-I	3X480V	16KW	20A	50/60Hz

4 Installation Dimension

WIN6000L

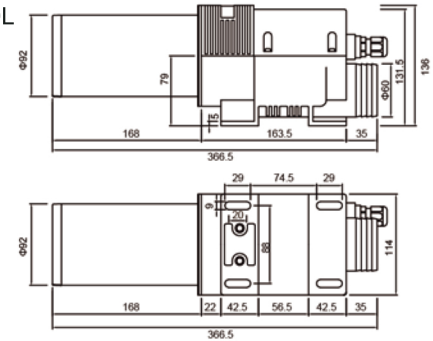

Air volume- Temperature Graph

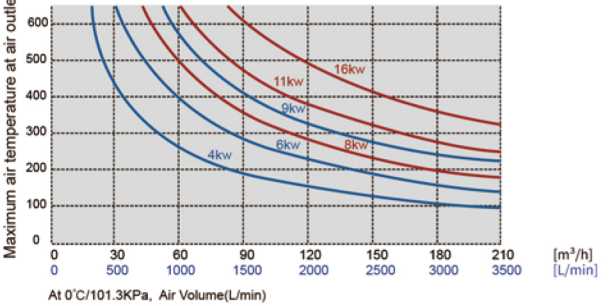

WIN6000S

1 Technical Parameter

Maximum air temperature at air outlet	600˚C
Maximum air temperature at air intlet	50˚C
Maximum temperature of operating environment	50˚C
Maximum voltage at air inlet	100KPa
European standard conforming mark	CE
Safety level	⧈

2 Product Picture

● Heating power is not adjustable

● Potentiometer heating power is adjustable

● Potentiometer or remote control interface available, Adjust heating power and temperature.

3 Product Model

Type	Voltage	Power	Current	Frequency
WIN6000S-A	3X230V	4KW	10A	50/60Hz
WIN6000S-B	3X230V	6KW	15A	50/60Hz
WIN6000S-C	3X230V	8KW	20A	50/60Hz
WIN6000S-D	3X400V	4KW	6A	50/60Hz
WIN6000S-E	3X400V	6KW	9A	50/60Hz
WIN6000S-F	3X400V	9KW	13A	50/60Hz
WIN6000S-G	3X480V	4KW	5A	50/60Hz
WIN6000S-H	3X480V	6KW	8A	50/60Hz

4 Installation Dimension

WIN6000S

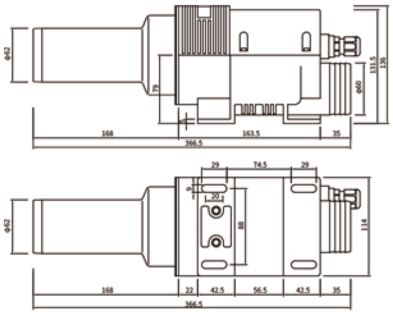

Air volume- Temperature Graph

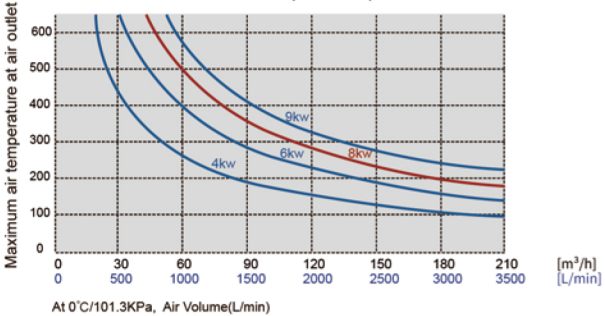

WIN5000

——Re-circulated Piped Heater

1 Technical Parameter

Maximum air temperature at air outlet	600/900˚C
Maximum air temperature at air intlet	150˚C
Maximum temperature of operating environment	100˚C
Maximum voltage at air inlet	100KPa
European standard conforming mark	CE
Safety level	⏚

2 Product Picture

WIN5000 Standard Series

WIN5000 Clean Series

3 Product Model

Type	Voltage	Power	Current	Frequency
WIN5000X-A	3X230V	8.1KW	21A	50/60Hz
WIN5000X-B	3X400V	4.5KW	7A	50/60Hz
WIN5000X-C	3X400V	6.5KW	10A	50/60Hz
WIN5000X-D	3X400V	7.5KW	11A	50/60Hz

Type	Voltage	Power	Current	Frequency
WIN5000Y-A	3X230V	8.1KW	21A	50/60Hz
WIN5000Y-B	3X400V	4.5KW	7A	50/60Hz
WIN5000Y-C	3X400V	6.5KW	10A	50/60Hz
WIN5000Y-D	3X400V	7.5KW	11A	50/60Hz

4 Installation Dimension

WIN5000 Standard Series

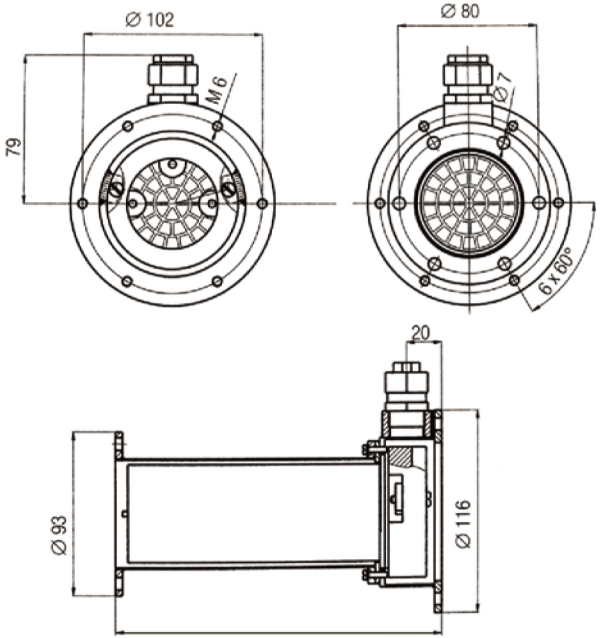

WIN5000X Standard Series 184.5

WIN5000Y Standard Series 246.5

WIN10000

——Re-circulated Piped Heater

1 Technical Parameter

Maximum air temperature at air outlet	600/900℃
Maximum air temperature at air intlet	150℃
Maximum temperature of operating environment	100℃
Maximum voltage at air inlet	100KPa
European standard conforming mark	CE
Safety level	⏚

2 Product Picture

WIN10000X Standard Series

WIN10000Y Standard Series

3 Product Model

Type	Voltage	Power	Current	Frequency
WIN10000X-A	3X230V	8.1KW	21A	50/60Hz
WIN10000X-B	3X230V	10KW	26A	50/60Hz
WIN10000X-C	3X400V	5.5KW	8A	50/60Hz
WIN10000X-D	3X400V	11KW	16A	50/60Hz
WIN10000X-E	3X400V	15KW	22A	50/60Hz
WIN10000X-F	3X400V	17KW	25A	50/60Hz

Type	Voltage	Power	Current	Frequency
WIN10000Y-A	3X230V	8.1KW	21A	50/60Hz
WIN10000Y-B	3X230V	10KW	26A	50/60Hz
WIN10000Y-C	3X400V	5.5KW	8A	50/60Hz
WIN10000Y-D	3X400V	11KW	16A	50/60Hz
WIN10000Y-E	3X400V	15KW	22A	50/60Hz
WIN10000Y-F	3X400V	17KW	25A	50/60Hz

Type	Voltage	Power	Current	Frequency
WIN10000Z-A	3X400V	35KW	51A	50/60Hz

4 Installation Dimension

WIN10000 Standard Series

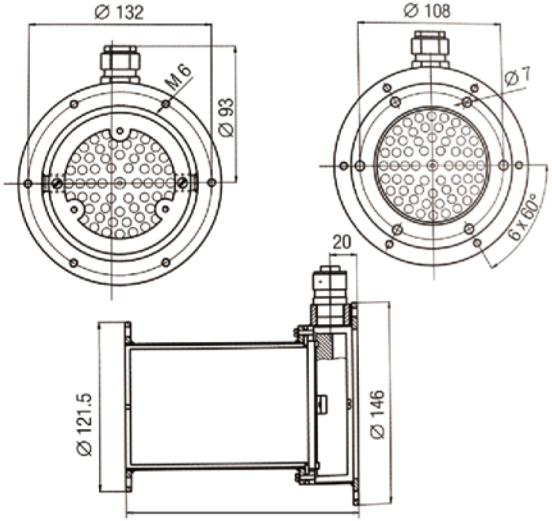

WIN10000X Standard Series 165
WIN10000Y Standard Series 257
WIN10000Z Standard Series 399

WIN10000

——Re-circulated Piped Heater

1 Technical Parameter

Maximum air temperature at air outlet	600/900℃
Maximum air temperature at air intlet	150℃
Maximum temperature of operating environment	100℃
Maximum voltage at air inlet	100KPa
European standard conforming mark	CE
Safety level	⏚

2 Product Picture

WIN10000X Standard Series

WIN10000Y Clean Series

3 Product Model

Type	Voltage	Power	Current	Frequency
WIN10000X-A	3X230V	8.1KW	21A	50/60Hz
WIN10000X-B	3X230V	10KW	26A	50/60Hz
WIN10000X-C	3X400V	5.5KW	8A	50/60Hz
WIN10000X-D	3X400V	11KW	16A	50/60Hz
WIN10000X-E	3X400V	15KW	22A	50/60Hz
WIN10000X-F	3X400V	17KW	25A	50/60Hz

Type	Voltage	Power	Current	Frequency
WIN10000Y-A	3X230V	8.1KW	21A	50/60Hz
WIN10000Y-B	3X230V	10KW	26A	50/60Hz
WIN10000Y-C	3X400V	5.5KW	8A	50/60Hz
WIN10000Y-D	3X400V	11KW	16A	50/60Hz
WIN10000Y-E	3X400V	15KW	22A	50/60Hz
WIN10000Y-F	3X400V	17KW	25A	50/60Hz

Type	Voltage	Power	Current	Frequency
WIN10000Z-A	3X400V	35KW	51A	50/60Hz

4 Installation Dimension

WIN10000 Clean Series

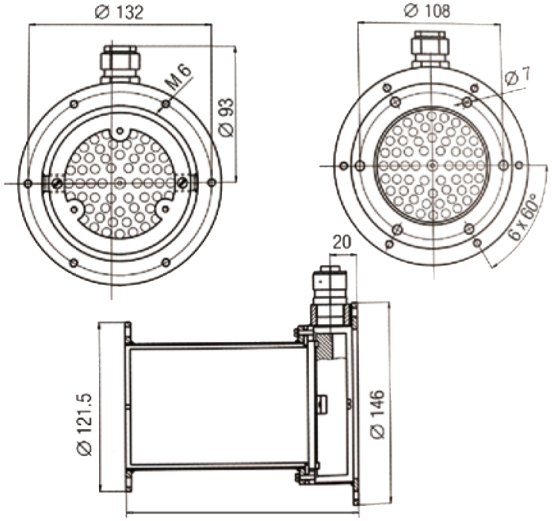

WIN10000X Clean Series 165
WIN10000Y Clean Series 257
WIN10000Z Clean Series 399

WIN30000

——Re-circulated Piped Heater

1 Technical Parameter

Maximum air temperature at air outlet	600/900℃
Maximum air temperature at air intlet	150℃
Maximum temperature of operating environment	100℃
Maximum voltage at air inlet	100KPa
European standard conforming mark	CE
Safety level	⏚

2 Product Picture

WIN30000X Standard Series

WIN30000Y Standard Series

3 Product Model

Type	Voltage	Power	Current	Frequency
WIN30000X-A	3X400V	30KW	44A	50/60Hz
WIN30000X-B	3X400V	40KW	58A	50/60Hz
WIN30000X-C	3X400V	50KW	73A	50/60Hz
WIN30000X-D	3X400V	60KW	87A	50/60Hz
WIN30000X-E	3X400V	70KW	102A	50/60Hz
WIN30000X-F	3X400V	80KW	116A	50/60Hz
WIN30000X-G	3X400V	90KW	130A	50/60Hz
WIN30000X-H	3X400V	100KW	145A	50/60Hz

Type	Voltage	Power	Current	Frequency
WIN30000Y-A	3X400V	30KW	44A	50/60Hz
WIN30000Y-B	3X400V	40KW	58A	50/60Hz
WIN30000Y-C	3X400V	50KW	73A	50/60Hz

4 Installation Dimension

WIN30000

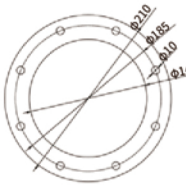

出风口

进风口

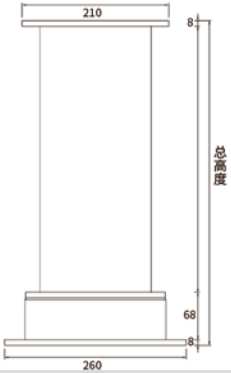

WIN30000X-A/B/C/D 320
WIN30000X-E/F 420
WIN30000X-G/H 520
WIN30000Y-A/B/C 465

Weld In Equipment Pvt Ltd
+91 81694 93708/9324847364
1st Floor, New Kamani Chambers, Nicol Road, Ballard Estate,Fort, Mumbai, Maharashtra 400001
www.weldinequipments.com
weldinindia@gmail.com
kamran@weldinequipments.com